GETTING TO KNOW THE DOWNTOWN FULLERTON 3D MODEL

Design, Community & Environment

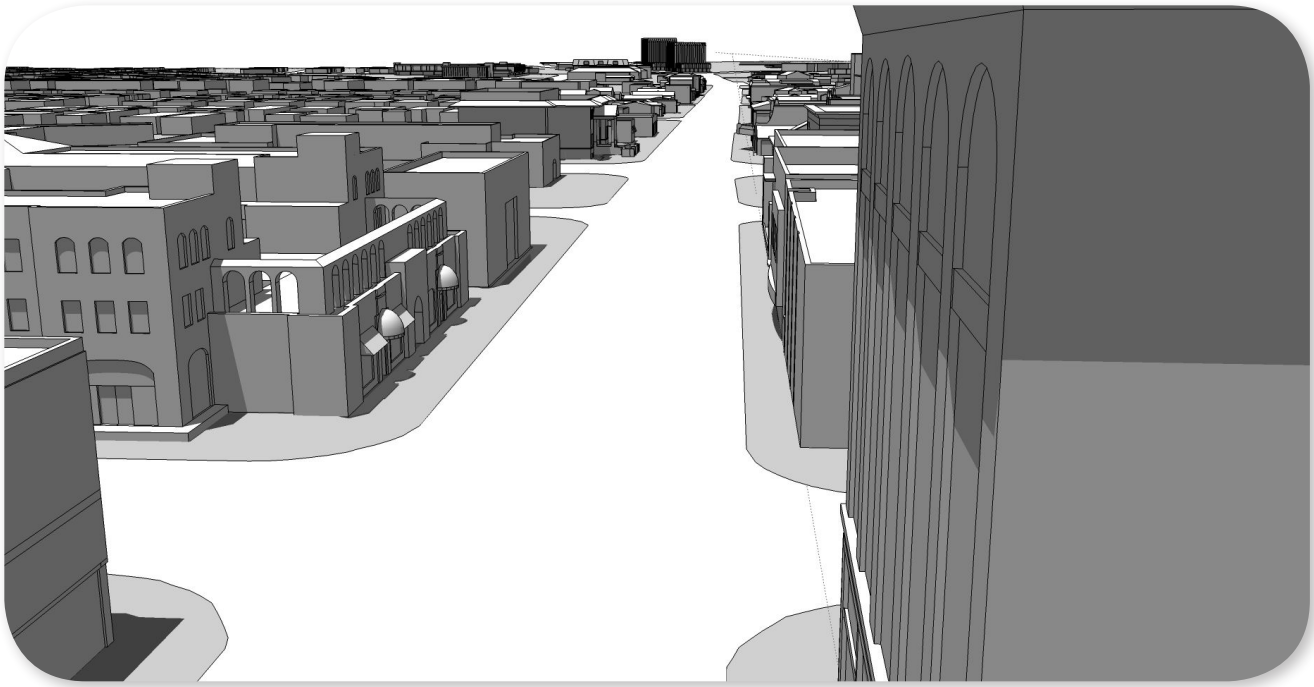

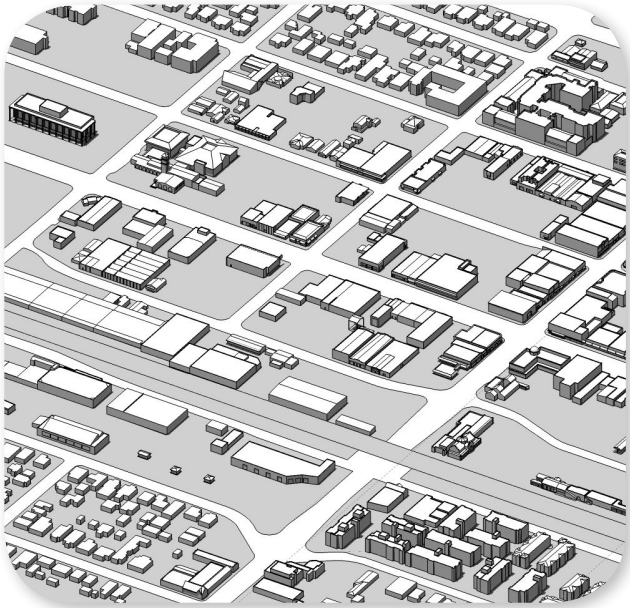

Getting to Know the
Downtown 3D Model of Fullerton in SketchUp

Overview of 3D Modeling Process in SketchUp

1. **3D Modeling in SketchUp**
   A. Creating a Model from Footprints in ArcGIS
   B. Creating a New Model in SketchUp
   C. Importing a New Model into existing Downtown 3D SketchUp files (see list below)
   D. Breaking Apart Multi-Story Buildings

2. **Final Check of Building Groupings in SketchUp**

3. **Select Buildings to Export to existing ArcGIS Multipatch feature class**

List of Required Software

- SketchUp 6 Pro
- ArcGIS SketchUp Plug-In
- Arcview 9.3.1 with 3D Analyst extension

List of files (18 total)

Core area separated in high detail (5 files)
- Central.skp or Central_multi_story.skp
- Eastern.skp
- Western.skp
- Northern.skp
- Southern.skp or Southern_multi_story.skp

Outer area separated in low detail (14 files)
- NE01.skp
- NE02.skp
- NE03.skp
- NW01.skp
- NW02.skp
- NW03.skp
- NW04.skp
- SE01.skp
- SE02.skp
- SE03.skp
- SW01.skp
- SW02.skp
- SW03.skp
- SW04.skp

Entire model (1 file)
- Full Model.skp

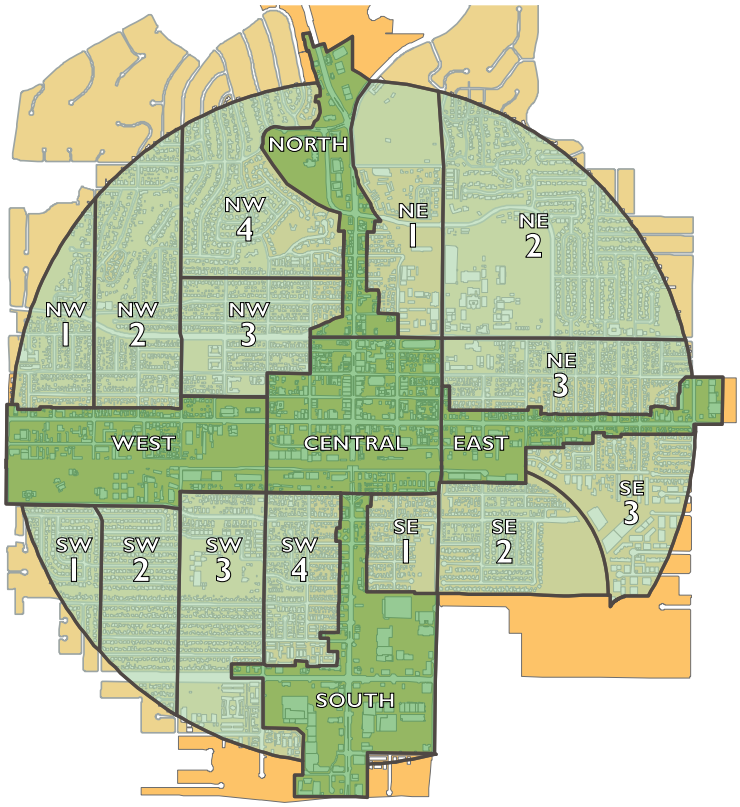

When attempting to export large numbers of footprints from ArcView to Sketchup with the plugin, you may experience limited success. For this reason we divided the area into 19 separate pieces: 5 files for the core and corridor areas and 14 different files for the outer areas. The divisions were based on features such as

MOST COMMONLY USED KEYBOARD SHORTCUTS

Key shortcuts for most commonly used tools*:

V = selection tool

L = line tool

M = move tool

Middle mouse button = orbit tool

P = push/pull tool

Space Bar = pan tool (hand)

O = offset

C = circle tool

R = rotate tool

Ctrl = copy
Shift = select multiple

Ctrl+Z = undo
Ctrl+C = copy
Ctrl+V = paste
Ctrl+X = cut

Selection tip: When selecting objects, if you drag your selection from left to right, only objects completely contained within your marquee will be selected. If you drag from right to left, everything your marquee touches will be selected.

*See the attached page of keyboard shortcuts for a more complete list.

large roads or building arrangements that allowed for a clean split and somewhat evenly distributed number of buildings between files.

I. MODELING NEW BUILDINGS

A. CREATING A MODEL FROM FOOTPRINTS IN ARCGIS

Once you have drawn footprints in ArcGIS and given them height information, you are ready to export to SketchUp to add building detail.

1) Select features to be included in export and click on the "Export selected items to SketchUp 6" icon. In the dialogue box that appears, select to extrude by field to auto-extrude the footprints to the specified heights in the "height" field.
2) Open the exported file in Sketchup 6 and proceed to add necessary amount of detail. At this point each footprint will be extruded to the proper base height.

GIS tips:
Footprints traced in GIS must be completely square as they would need to be in real life.

Each vertex created in GIS will become a vertical line that extends up the face of the building. For the cleanest possible model, use only the minimal number of vertices when tracing building footprints.

B. CREATING A NEW MODEL IN SKETCHUP

1) The first step is getting the buildings extruded to the proper height to begin modeling. If you imported a model from ArcGIS with height information, this will already be done. There are two options:
   a. Footprints and heights from ArcGIS – if this is the case you are finished and can move on to *Step 2*. Otherwise, follow the next step.

   b. Extrusion in Sketchup
      i. Using the *Push/Pull* tool, hover over a footprint face and click.
      ii. Drag upward and release
      iii. Type the desired building height and press *enter* (you will see a box in the lower right hand side of the SketchUp window displaying the distance information)
      iv. Repeat with all necessary features, extruding each to the appropriate height
2) Begin modeling prominent features first
   a. Enter grouped object
      i. To make modeling easier, turn on group isolation: go to *view/component edit/hide rest of model* (make sure there is a check mark next to this option)
      ii. Make sure all pieces of the building are contained in one group -- double-click the building group to enter
   b. Remove extraneous lines – using the *selection* tool select and delete (this is also a way to double-check that surfaces are indeed flat – if they are not, faces will disappear when these lines are deleted)
   c. Model important features
      i. Towers

         1. Bisect surfaces – we are going to focus on the **near tower roof**
            a. Enter the tower object group
            b. Using the *line* tool, hover over one corner vertex and draw a line from corner to corner splitting the top of one tower. When you hover over each vertex you will see a green box indicating that you are snapping to the vertex.
            c. Draw another line connecting a third corner to the midpoint of the first line drawn (if you try to draw a line directly across from corner to corner you will see that the surfaces do not split properly).

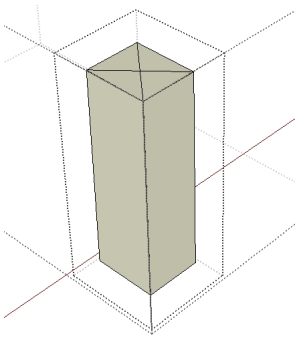

         Extrude or raise features
            a. Switch to the *move* tool and hover over the middle vertex of the top of the tower
            b. Select that point, press the *up* arrow key to restrict movement to the z-axis, move the vertex up along the z-axis and then type in a

distance. We'll use 5'.

c. Press *esc* to exit editing of the feature.

3. Define the edge detail
    a. Select the edges that border the top of the tower – press and hold the *shift* key to select multiple elements at once
    b. Using the *move* tool, hold the *ctrl* key and click a corner vertex to select it. Drag downward and release.
    c. Type a distance of 12 (this will be 12 inches) and press *enter*.
    d. Using the *push/pull* tool, push in one side of the tower about 6" to emphasize the detail. Similar to before, you can specify the distance of your push. After pushing the surface, release, type in a distance of 6 and press *enter*.
    e. To repeat this function on each remaining side, just double-click each of the remaining tower faces with the *push/pull* tool.
    f. Because we modeled in this order, we now have a gap between the tower and the main structure. Close this by rotating your view to below the building. Using the *move* tool, select the vertex in the corner and drag to snap to the corresponding interior corner vertex on the main structure.
4. Repeat these steps on the second tower

ii. Rooflines
1. Shape the building massing to align with the rest of the structure:
    a. Double click to enter the grouped body of the building. To ensure all walls are parallel, push/pull and snap to each other
    b. Draw lines splitting the smaller features in the front and rear of the building from the middle section
    c. Push these front and rear surfaces below the roof line to allow you to model the roof pitch
    d. Delete lines created by pushing these surfaces
2. Shape the roof pitch
    a. Bisect the main structure by drawing a line lengthwise from midpoint to midpoint
    b. Select the lines along each side

iii. Windows (for historic or special focus)
1. Draw a line from peak of roof to midpoint of circular window as a guide for placing the window on the surface of the church
2. Using the *circle* tool draw a circle beginning at the end of the line you just drew and type a distance for the radius of the circle. Press *enter* to finish the circle

3. Select and delete the guide line, which should have been split by your circle (if not, the circle is not properly placed on the surface and the faces will not extrude properly)
4. Using the *offset* tool, mouse over the circle you just drew, click and drag outward to create an edge detail for the window

5. Using the *push/pull* tool, push the middle circle in, type 6 and click *enter*.

6. Using the *push/pull* tool again, pull the face of the outer detail circle, type 6 and click *enter*.
7. You now have a circular window. You can add more detail to the window or create other window features the same way.

iv. Other important secondary features – cornice, ground floor windows and entries, upper story window recessions, other prominent building face details, etc.

v. Apply final roof details including parapet (6" for thin, 12 to 24" for wide) --This is done toward the end of the process in case changes to the building form need to be made before modeling is complete. It is much more difficult to adjust the overall massing of the building if roof edge detail has been modeled.
1. Using the *selection* tool, enter the main building group and select all edges of the roof.
2. Using the *move* tool, click one of the corner vertices and drag down.
3. Type 12 and click *enter*.

4. Using the *push/pull* tool, pull the front edge outward, type 6 and click *enter*.

3) Model necessary site features
4) Explode and re-join separated building components
    a. Explode all components, then re-group
        i. Select each, right-click and choose *explode*
    b. Select all (triple-click on building)
    c. Right click and choose *intersect with selected*
        i. *This intersects all surfaces and will result in a cleaner model
        ii. **Note that once this is done, editing individual components may be more difficult so you should:
            1. *Save as* to ensure you have a backup copy of the original
            2. Try to do this only after you believe you will not need to make significant edits

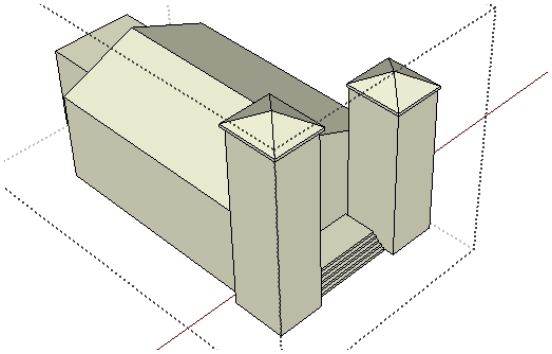

C. IMPORTING A NEW MODEL INTO SKETCHUP

In most cases, when making major edits or changes to your model, it is a good idea to do a *save as* before proceeding. The easiest way to add a new building from an existing Sketchup model is to open a second instance of SketchUp with that model, *copy* and then in your main model, *paste* that building in.

Place the building anywhere in the scene with one click and then you will have the option to snap it to a point. If necessary, a line can be drawn in the scene from a known reference point to create a point to snap the new building to.

D. BREAKING APART MULTI-STORY BUILDINGS

The easiest way to create a "multi-story" object that is made up of different pieces grouped independently is to build it that way from the start. If you are working with a building that has already been modeled but needs to be broken into pieces, there are some tricks to making it easier.

1) Enter the grouped object
2) Draw lines to bisect surfaces at each story that is intended to be a separate object.
3) Using the selection tool, click and drag from left to right to completely capture ***all*** of the pieces that will make up one of the components. (Dragging a selection from left-to-right allows you to only select elements that are completely contained within your selection).
4) Using the *move* tool, hold *ctrl* and move a copy of these pieces up into the air space above your building.
5) Now re-select the features you copied in the main building form and delete them. (Selecting from right-to-left will allow you to select everything you touch, instead of just what is completely contained in your selection).
6) Select all elements of each of the new stories and group them into individual groups.
7) Using the *move* tool, select the bottom rear corner of the new upper story and move it back down to the rest of the building. Snap it into place at the proper vertex.

II. FINAL CHECK OF BUILDING GROUPINGS

All elements in a building must be grouped together. This allows the modeler to hide the rest of the model to shape building features accurately and effectively and will also allow a clean import to GIS with only one unique ID for each building (unless modeling *multi-story* building elements).

Assuming you are grouping all related parts of buildings as you are modeling this should not be an issue. If not, you may need to check your model.

III. EXPORTING BUILDINGS TO ARCGIS

To ensure that buildings in Sketchup export as white into the *multipatch*, you will need to apply color to each of the individual parts of the building. Adding the color to the whole group will not result in the color exporting to the *multipatch* properly.

Select buildings to export to GIS:

1. If you are **replacing** buildings in the model choose the existing multi-patch and follow the "Importing New Buildings" steps in the *Getting to Know the Downtown 3D Model of Fullerton in ArcGIS.*
2. If you are modeling **proposed** buildings, create a new multi-patch in the same geodatabase for proposed buildings and export to that following the same instructions.

IV. MODELING TIPS

MODELING TIP LESSON #1 – PITCHED ROOFS OR OTHER PERPENDICULAR UNEVEN FEATURES

When modeling perpendicular pitched roof features, such as window eaves or other such features:

1) Model main roof pitch first
2) Extrude a box horizontally outward from the wall the width and depth of the perpendicular eave.
3) Extrude that box to the final height of the eave and draw a line across the middle of the top of the box where the peak will be
4) Select the lines on either side and using the "move" tool, lower them to the appropriate height
5) Pull the face of the eave nearest the main roof pitch and snap to the peak of the main roof pitch

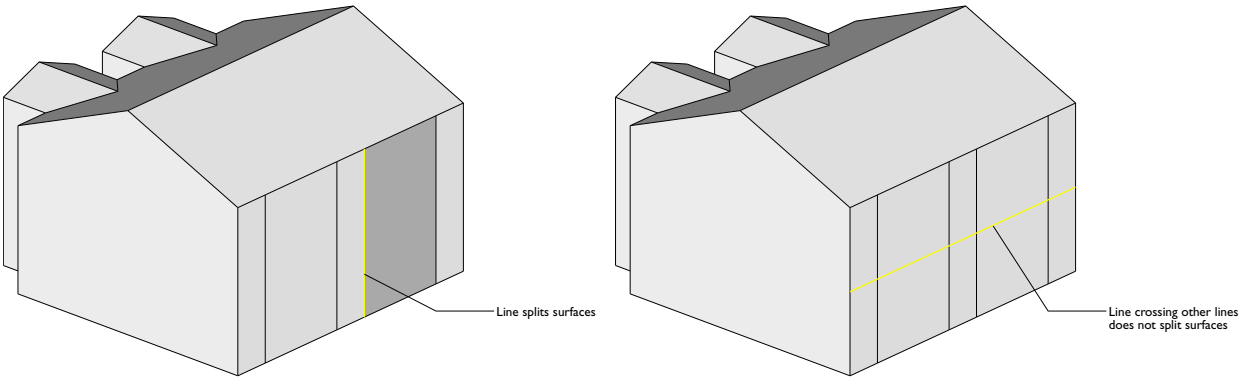

MODELING TIP LESSON # 2 – PARALLEL SURFACES

Modeling surfaces that are intended to be parallel in real life **requires** perfectly parallel surfaces in SketchUp to ensure shapes will extrude and divide properly. Make careful use of the snap features to ensure lines are in fact parallel or perpendicular.

> *The magenta line that lights up when snapping to a point indicates that the line being drawn is perpendicular to the edge it is connecting to. It is crucial to pay close attention to this line because often snapping to the red or green axis will cause problems if the model is not parallel/perpendicular to these scene axes. When in doubt, rely on the model, not the scene.

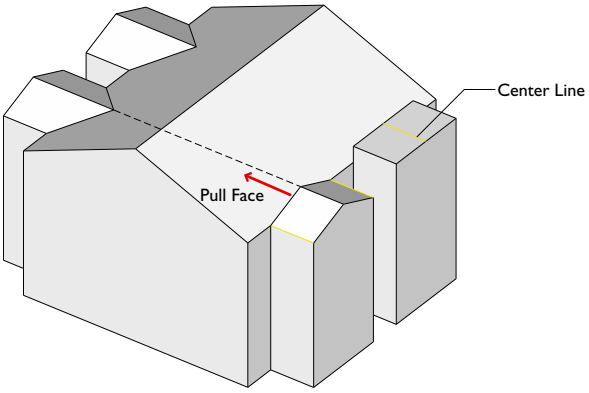

MODELING TIP LESSON #3 – LINES, SURFACES AND GROUPS

Everything in Sketchup should be combined into groups. Groups allow for easier modeling and will allow for a cleaner Sketchup to GIS import. When working with groups, the option is available to hide all other elements of the model not included in the current group. This option is found in the "view" menu as "hide rest of model."

> *This is especially useful when working in areas where it is difficult to see past elements or when working on sides of the model that are adjacent to the sides of other group elements.

Every line drawn between two points across a surface will split that surface into two separate surfaces. At the same time, lines drawn across lines but not snapped specifically to them will not split surfaces. See the example below.

Similarly, every line segment drawn exactly on top of another line will divide that line into pieces made up of the new line and the leftover length of the original line.

Any time two surfaces that are completely parallel touch, they will automatically become one surface. This is helpful when combining elements but can be a problem when trying to place two separate objects directly adjacent to each other but maintaining their integrity as two individual pieces. To keep the objects separate, create a group from each object or set of objects before placing them together.

All elements in a building must be grouped together. This allows the modeler to hide the rest of the model to shape building features accurately and effectively and will also allow a clean import to GIS with only one unique ID for each building (unless modeling *multi-story* building elements).

Getting to Know the
3D Downtown Model of Fullerton in ArcGIS

Overview of 3D Modeling Process in ArcGIS

1. Build, Edit or Import 3D Models(s) in SketchUp (see "Getting to Know Dowtown3D in SketchUp")

2. Export New, Updated or Proposed 3D Buildings from SketchUp into multipatch feature class in ArcGIS (using SketchUp 6 and ArcGIS SketchUp Plug-Iin)

3. Populate ID fields of multipatch attribute table (BLDG ID, APN, Land Use, Zoning, etc.) in ArcMap

4. Visualize 3D model(s) in ArcScene or ArcGlobe

List of Required Software

- ArcGIS 9.3.1 w/ 3D Analyst extension
- ArcGIS SketchUp Plug-In
- SketchUp 6 Pro

List of Files

1. DCE_3D_Model_Fullerton_Final.mdb
2. Fullerton_3D_Downtown_Model.sxd
3. Fullerton_3D_Downtown_Model.3dd
4. Getting to Know Downtown 3D in ArcGIS.doc (this document)

A. Overview of Features and Layers

1. The 3D Downtown Model Geodatabase <DCE_3D_Model_Fullerton_Final.mdb>
This geodatabase contains all the GIS data used for the 3D Downtown Model. The primary components of the 3D model are buildings, site features and curbs and medians. Other layers can be incorporated into the model for visualization purposes. The geodatabase contains the following feature classes.

a. "Buildings"
The buildings are a multipatch feature class that was originally modeled in SketchUp. Each building is one record, and has one corresponding entry in the attribute table. The mixed-use buildings are exceptions to this rule; each floor or use of the building is its own record. Buildings in the Core and Corridor area have been modeled with considerably more building detail than the other areas within the Project Area. More information on the building attributes is described in detail below.

b. "Site_Features"
The site features are a multipatch feature class that contain site features that have been modeled in Sketchup that are not buildings, such as the pedestrian overpass at the train station.

c. "Curbs_and_Medians"
The curbs and medians are polygon feature classes that are a two-dimensional dataset that represents all the curbs and medians in the project area. The data can be extruded in ArcScene or ArcGlobe to a represent three-dimensional six-inch curbs.

d. "Local_Aerial"
The local aerial raster dataset is a high-resolution orthophoto (one-foot resolution) that has been purchased as part of this project to assist with the digitizing of building footprints within the study area. The orthophoto has been clipped to the project area.

e. "Streets"
Streets are a polyline feature class from the City of Fullerton and have been clipped to the Project Area. The primary purpose of this layer is to display street names in ArcGlobe.

f. "Project_Boundary"
The project boundary feature class indicates the extent of the three-dimensional model. The "Core and Corridor" area is the area of higher detailed modeling, while the "One-Mile Radius" area is the outlying portions of the project area where all buildings have been modeled but less detail has been included.

g. "Trees"
The trees feature class uses the GIS-based tree inventory database maintained by the City of Fullerton. The data have been clipped to the Project Area and can be displayed using three-dimensional symbology in ArcGIS.

h. "DEM_10m"
This raster dataset contains elevation data for the Project Area. It can be used in ArcGlobe to drape layers over the terrain.

i. Parcels (and other City GIS data)
Parcels are a copy of the polygon feature class of the parcel dataset received from the City. This dataset is representative of any two-dimensional GIS data (e.g. land use, zoning, etc.) which can be displayed in conjunction with the 3D ArcGIS model.

j. ESRI streamed data sets (ArcGIS Online)
ESRI maintains data sets that are available for streaming through the internet. These datasets provide general background information and context for the primary data layers. Available data include aerial imagery, elevation, transportation, and boundaries and places.

k. ArcScene and ArcGlobe Documents

The following documents can be opened to view the 3D Downtown Model:

- **"Fullerton_3D_Downtown_Model.3dd."** This .3dd document is formatted to display the 3D Downtown Model in ArcGlobe.
- **"Fullerton_3D_Downtown_Model.sxd."** This .sxd document is formatted to display the 3D Downtown Model in ArcScene.

2. Software

The following additional software is needed to edit the 3D Downtown Model:

- **ArcGIS 9.3.1 w/ 3D Analyst extension**
- **ArcGIS SketchUp Plug-in.** This plug-in enables SketchUp to export directly to an ArcGIS geodatabase file format and also allows ArcGIS to export to SketchUp files.
- **SketchUp 6 Pro.** The ArcGIS plug-in will not work with more recent versions of SketchUp, so SketchUp 6 must be used to model buildings and features if they are to be exported to an ArcGIS format. ArcGIS 10 once released will have direct import capabilities for both SketchUp (.skp) and Google Earth (.kml/.kmz) which should greatly enhance the future work flow by not requiring the plug-in and allowing use of SketchUp 7.

B. Displaying the 3DDowtown Model in ArcGIS

1. ArcScene vs. ArcGlobe

The 3D Downtown Model of Fullerton can be displayed in ArcGIS using either ArcGlobe or ArcScene. Generally, ArcGlobe is a more comprehensive visualization environment that includes a wide variety of free streamed layers from ArcGIS Online such as imagery, transportation, and elevation. Generally, DC&E recommends using ArcGlobe for most visualization applications since it is more flexible in its ability to place objects on terrain models. ArcScene is a clean environment for visualizing the model, but DC&E recommends using ArcScene only if the user is not interested in modeling the 3D multipatch features on terrain which might be applicable for certain urban design applications.

These two different software applications are similar in their treatment of 3D data, but have key differences. Key differences are highlighted below:

- **Base viewing environment.** ArcScene displays data along a horizontal viewing plane, and three-dimensional objects are extruded from this plane. ArcGlobe displays data overlain onto a three-dimensional globe, or representation of the earth.
- **Viewing graphics.** ArcGlobe rasterizes all data as it is represented. ArcScene is able to display true vector-quality data.
- **Labels and 3D Graphics**. ArcGlobe can generate labels that are draped on the earth's surface or that float independently as well as display 3D graphics. ArcScene cannot generate labels, but can display 3D graphics, which can include text.
- **Capabilities**. ESRI is putting more effort into development of ArcGlobe than ArcScene, and ArcGlobe currently has more options for navigation and display parameters. As future versions of the software are released, ESRI will be more likely to make improvements to ArcGlobe than ArcScene.

2. Opening the 3D Downtown Model in ArcGlobe

This section contains an overview and tips for viewing the three-dimensional model in ArcGlobe.

a. Open the ArcGlobe Document (.3dd)

The "Fullerton_3D_Downtown_Model.3dd" document contains layers set up to display the model. There are three types of layers in ArcGlobe:

- **Floating Layers** define their own place in 3D space by containing z-values in feature geometry, feature attributes, or layer level settings. Examples include clouds, boundaries, etc.
- **Draped Layers** are placed on top of Elevation Layers obtaining their z-values from one or more Elevation Layers that are dynamically stitched together by ArcGlobe.
- **Elevation Layers** provide a 3D surface (Grids or TINs) for other layers to be placed upon and which are automatically used to supplement the terrain of the underlying globe model.

The following layers are included in the "Fullerton_3D_Downtown_Model.3dd" document:

Draped Layers:

- Buildings - General Plan Land Use
- Site Features
- Curbs and Medians
- Local Aerial
- Street Labels
- Parcels
- Trees
- ESRI_Imagery_World-World Imagery
- Boundaries and Places
- Reference/ESRI_Transporation_World-Transportation

Floating Layers:

- Project Boundary
- California Counties

Elevation Layers:

- DEM 10m
- Elevation/USGS_Elevation_US-Elevation (30m)
- Elevation (90m/1km)

b. Bookmarks

The "Fullerton_3D_Downtown_Model.3dd" document that DC&E has provided contains several bookmarks of key locations. To use these bookmarks select one from the "Bookmarks" menu. To add a bookmark of your own, select "Create" from the bookmarks menu.

c. Review Navigation Tools

The ArcGlobe Tools toolbar is shown below

The navigation tools in this toolbar are described below:

Button	Name	Function
	Navigate	Navigates the globe
	Fly	Allows you to interactively fly through the globe
	Walk	Allows you to walk on the globe surface
	Zoom In/Out	Dynamically zooms in and out on the globe
	Center on Target	Centers the view at the selected target
	Zoom to Target	Zooms to the selected target
	Narrow Field of View	Narrows the field of view for the viewer
	Expand Field of View	Expands the field of view for the viewer
	Pan	Pans the globe
	Navigation Mode	Toggles globe and surface navigation modes
	Full Extent	Displays the globe at full extent

d. Html Pop-up

HTML pop-ups are small windows containing HTML and Web content that allow you to take advantage of HTML formatting, links, and multimedia to display the attributes of geographic features and related information. HTML pop-ups work much like the Identify or Hyperlink tools except that the information display includes HTML.

<u>Accessing a feature's HTML pop-up</u>

1. Make sure the layer containing HTML content is checked (visible) in the table of contents.
2. Click the HTML Pop-up tool on the Tools toolbar.
3. When you hover over a feature for which HTML content exists, the mouse pointer changes to a hand and you will see a MapTip with the value of the primary display field for that layer or a URL.
4. In ArcMap, any visible features in the map that have HTML content defined are outlined.
5. Click the feature.
6. The HTML content is accessed and displayed in the pop-up window. You can adjust the pop-up window's size and location on the screen.

Setting HTML properties to display a pop-up with a table of attributes

1. Right-click the layer that you want to have HTML content enabled for in the table of contents and click Properties.

2. Click the HTML Popup tab.

3. Check Show content for this layer using the HTML Pop-up tool.

4. Click the option to display HTML formatting as a table of the visible fields.

5. Optionally, check the Hide field name column to display only the attribute values of a feature.

6. Optionally, check Display coded value descriptions for all HTML content. When this is checked, fields with coded values will be displayed with the coded value description.

7. Click OK.

e. Understanding the 3D Layers and Their Properties

Any two- or three-dimensional dataset can be displayed in ArcGlobe. For best results, when adding a new layer, right click on a layer, and select "layer properties" and use the guidelines described below for best results.

i) Elevation Tab

For draped layers, there is nothing that needs to be done in the Elevation Tab. Simply make sure that the option to "Drape layer on globe surface" is checked. These layers will be draped on all elevation datasets contained in the Elevation Layers. ArcGIS online provides free streaming datasets of the 30 meter Digital Elevation Model (DEM) from the USGS. We have also included a 10 meter DEM for the study area. When a Elevation layer is removed or "turned off," it is best to save the ArcGlobe document and reopen it in order for the data to refresh properly and optimal display.

Buildings can also be offset from the DEM it is draped on. This is possible by setting the "elevation above surface" under the Elevation tab under the layer properties.

ii) Symbology Tab.

You can set the Symbology for a multipatch or any type of data in ArcGlobe by going to the Symbology tab under layer properties (as it is done in ArcMap). For example, the buildings layer in the ArcGlobe model provided by DC&E symbolizes buildings based on General Plan land use designation. Unfortunately there is no way to display the outlines of the buildings in the multipatch layer, in the way that SketchUp does (for certain visualization functions out side of ArcGIS, the DC&E modeling team recommends using the SketchUp model directly).

Points can also be symbolized using **3D Symbology** sets included in ArcGlobe. For example, the trees layer provided by DC&E symbolizes the tree point data (all as one tree type) with 3D symbols representing trees.

iii) Globe Display Tab

For floating layers, set the "See-through position" (in the layer properties under 'Globe Display') to at least +6 for each layer. If you do not do this, setting symbols to have transparency in ArcGlobe will result in the globe being shown through the transparency, not the other layers that are underneath the layer with the transparency.

To properly display three-dimensional symbols, such as trees, as you navigate around the model be sure to check the box for "Scale 3D symbols with distance."

iv) Cache Tab

Caching is critical to the memory intensive operations required for 3D modeling. We have made some recommendations below; however, it is likely over time that the City will tweak these settings for optimal and rapid display. ArcGlobe uses two types of caches:

- ♦ Memory cache – this determines how much memory (RAM) is allocated for each layer. You can adjust this by going to Tools->Options->Cache and hitting the advanced button. You can allocate more memory to layers that need it such as the Multipatch feature class (building in particular) or features will many vertices (such as the parcels or streets).
- ♦ Disk cache – ArcGlobe automatically caches each layer as you view it on your local drive. This is equivalent to the "Map Cache" in ArcMap.

- o The default cache settings seem appropriate for this project.
- o If a given layer contains a large set of data or covers a large geographic area you can build a cache for some of the data by building a partial cache. You can enable a "partial cache" by hitting the "Advanced" button on the Cache Tab in the layer properties.
- o When you save a layer file or an ArcGlobe document, it saves the caches for the layers to be accessed later.

f. Editing the Downtown3D Model

i) **Importing New Buildings**

As new buildings are built, remodeled, or proposed in Fullerton it is possible to update the buildings layer. New or proposed buildings or features must be modeled in SketchUp and then exported to GIS. Use these steps to add new buildings to the model:

<u>Delete Existing Buildings (where necessary)</u>

- ♦ If a new or modified building is supposed to replace an existing building, first delete that building from the multipatch that you would like to update. You must delete the building in ArcMap, because ArcGlobe and ArcScene does not have an editing mode. You can load the multipatch into ArcMap and select and delete the feature in the same way that you would delete any feature in ArcMap in the editor mode.
- ♦ For "proposed buildings" we recommend exporting the SketchUp models to an entirely separate multipatch feature class so "proposed" buildings are not confused with actual buildings.

<u>Setting up a Geodatabase and Multipatch Feature Class</u>

- ♦ Create a personal geodatabase (if one doesn't already exist). You cannot export from SketchUp into a file geodatabase.
- ♦ A multipatch feature class must already exist within a personal geodatabase when exporting the SketchUp model to ArcGIS. Create a new blank multipatch feature class in the personal geodatabase for "proposed features". The multipatch must have a Z tolerance of 0.001, or something smaller. The automatic Z tolerance of 2 is too large for the multipatch shapes to be exported from SketchUp. If you are replacing existing building or importing new buildings into ArcGIS, use the existing 3DDowntown multipatch feature classes (or a copy).

Exporting SketchUp Models into ArcGIS

- Open the 3D Fullerton SketchUp file with the buildings you want to add to the ArcGIS model, and select the buildings you want to export. This may avoid them all being grouped into one feature. If you have the ArcGIS plug-in installed, you can export these buildings to the multipatch feature class in the personal geodatabase. It is important that the SketchUp source come from one of the 3D Fullerton SketchUp files for the new buildings to be imported into ArcGIS with the correct coordinate information.
- After exporting into a geodatabase, compact the database before exporting the next Sketchup file.
- You can export multiple Sketchup models into one feature class.

Tip: Unwanted Colors from SketchUp

- Unwanted colors that are applied in SketchUp might be imported into ArcGIS. If you encounter this problem, you can convert the exported multipatch feature class to a multipatch shapefile and then convert it back to a feature class in a geodatabase. However, this process will lose some detail. Most notably, curved surfaces will be converted to flat planes.
- Alternatively, to ensure that buildings in Sketchup export as white into the multipatch, you have to go into each building, and apply the color to all the individual parts of the building. Adding the color to the whole group will not result in the color exporting to the multipatch properly.

ii) **Adding Attribute Data to New or Existing Buildings**

As new buildings are added to the building multipatch layer, corresponding attributes will need to be added as well. This can be done following the same process that attribute data would be added to any type of GIS data. We recommend two approaches for adding attribute data:

1. Edit Attribute Values Manually (for a few buildings)

Load the multipatch into ArcMap, start editing, and manually type attributes into the attribute table in the same process that would be used for any ArcGIS data. For example, if one building is added, we recommend looking up the corresponding Zoning and General Plan information and manually coding it in the table (rather than doing the spatial join that is described below). Note that it is particularly important to give a new building a unique building ID number in the "BldgID" field, so that any information from other sources in the future can be joined back to that building.

2. Calculate Values (for dozens of buildings)

There are various attributes that can be calculated automatically for all shapes within a multipatch. DC&E has calculated some attributes for all the buildings using some of these techniques. For example, DC&E used the following steps to assign APNs, General Plan Land Use Designations, and Zoning Categories to all the buildings:

- Add "X," and "Y" fields to the attribute table (field type should be double)
- Use the "Calculate geometry" tool to calculate the X centroid and Y centroid of the multipatches in these fields.
- Export the attribute table.
- Build a point file from the X and Y coordinates in the table.
- Do a spatial join with this point file to the other information that you would like to include with the buildings (in this case parcels, General Plan, and Zoning shapefiles)
- Join the table from the point file to the multipatch buildings layer using the unique ID field.
- For buildings that are sited on more than one parcel, the APN field corresponds to the parcel where the centroid of the building is located.

3. Opening the 3D Downtown Model in ArcScene

This section contains tips for viewing the three-dimensional model in ArcScene.

a. Open the document

The "Fullerton_3D_Downtown_Model.sxd" document contains the following layers (the source feature classes are all stored within the provided geodatabase) set up to display the 3DDowtown model:

- Trees
- Site Features
- Project Boundary
- Parcels
- Buildings
- Curbs and Medians
- Elevation
- Local Aerial

b. Bookmarks

The ArcGlboeModel.3dd document that DC&E has provided contains several bookmarks of key locations. To use these bookmarks select one from the "Bookmarks" menu. To add a bookmark of your own select "Create" from the bookmarks menu.

c. Review Navigation Tools

The ArcScene Tools toolbar is shown below:

Button	Name	Description
	Navigate	Navigates the scene
	Fly	Flies through the scene
	Zoom In/Out	Dynamically zooms in and out on the scene
	Center on Target	Centers the view on the selected target
	Zoom to Target	Zooms to the selected target
	Set Observer	Sets observer position to the selected point
	Zoom In	Zooms in on the scene
	Zoom Out	Zooms out on the scene
	Narrow Field of View	Narrows the field of view for the viewer
	Expand Field of View	Expands the field of view for the viewer
	Pan	Pans the scene
	Full Extent	Displays the scene at full extent

d. Html Pop-up
- see above -

e. Understanding the 3D Layers and Their Properties
Any 2D or 3D dataset can be displayed in ArcScene. For best results, when adding a new layer, go to the layer properties and use the guidelines described below.

i) Base Heights Tab
Mulitpatch features, which are true 3D objects already, have base heights and therefore cannot be "draped" in ArcScene on other elevation surfaces such as the 10 meter DEM (although you can drape them on other elevation surfaces in ArcGlobe). Consequently, this restriction only applied to the 'buildings' and 'site features' layers. However, we have stored the minimum, maximum and average elevations for these building based on the underlying 10 meter Digital Elevation Model. These can be used to display the buildings at their appropriate heights, by entering them into the "offset" box on the Base Heights Tab.

All the other 2D layers can draped on a terrain by going to the Base Heights Tab by checking the box that says "Obtain heights for layer from surface" and specifying the elevation dataset that you would like to drape the features over, such as the 10-meter DEM that is in the geodatabase DC&E has provided.

ii) Symbology Tab.

You can set the symbology for a multipatch or any type of data in ArcScene by going to the symbology tab under layer properties. For example, the buildings layer in the ArcGlobe model provided by DC&E symbolizes buildings based on General Plan land use designation. Unfortunately there is no way to display the outlines of the buildings in the multipatch layer, in the way that Sketchup does. This means that the buildings are more visually appealing in Sketchup.

Points can also be symbolized using 3D symbology sets included in ArcGlobe. For example, the trees layer provided by DC&E symbolizes the tree point data with 3D symbols representing trees.

iii) Extrusion Tab

You can extrude a 2D layer such as the curbs and medians to a specified height by entering it in the "Extrusion value or expression" window in the Extrusion Tab.

f. Editing Data

- Edits to both 3D multipatch features and 2D feature classes, and changes to their associated attribute tables, must be conducted in ArcMap.
- Although there some basic editing of multipatch features can be conducted in ArcMap (but not pertaining to their 3D elements) editing of the 3D model should be conducted in SketchUp. The process for editing the 3D structure of any object is detailed in the "Getting to Know the 3D Downtown Model in SketchUp"
- The process for adding new or modified buildings from SketchUp is described in detail in the ArcGlobe section above.

Facts (from the U.S.Green Building Council):
In the United States, buildings account for:

- 72% of electricity consumption
- 39% of energy use
- 38% of all carbon dioxide (CO2) emissions
- 40% of raw materials use
- 30% of waste output (136 million tons annually)
- 14% of potable water consumption

What to Measure	Data (Proxy)	Value	Effect	Category
ENERGY EFFICIENCY				
Features reducing energy usage	On-site renewable energy systems (i.e., solar, wind, geothermal, low-impact hydro, biomass)	presence/ absence	+	Site
	Energy Star equipment	presence/ absence	+	Building
	Building automation system for heating, cooling, ventilation, and/or lighting	# of major systems automated	+	Building
	Green roofs	presence/absence, or % cover	+	Building
WATER EFFICIENCY				
Features reducing water usage	Greywater systems, dual plumbing	presence/ absence	+	Building
	Participant in SoCal WaterSmart rebate program	presence/ absence	+	Building
GENERAL				
Pre- and Post-1978 Title 24 regulations	Building age	pre-1978 and post-1978	- (older)	Building
Sustainable buildings	LEED certification	Certified, Silver, Gold, Platinum	+	Building
MATERIALS - NEW CONSTRUCTION				
Features reducing material waste	use of recyclable materials	presence/ absence	+	Building
Amount of waste going to landfill	waste amounts by land use/building type	waste in pounds	-	Building

Additional Measurements	Data (Proxy)	Value*	Effect*	Category
ENERGY EFFICIENCY				
Reducing Heat Island Effect	Aspect of roof			Building
	Windows, size and location			Building
	Types of building materials			Building
	Ventilation, natural			Building
	Shade			Site
	Surrounding Pervious Space			Site
SUSTAINABLE SITES				
Proximity to transit	Walking distance to Metrolink, bus lines	within or outside 1/4-mile	+	Site
Proximity to goods and services	Walking distance to goods and services (i.e., grocery store or commercial corridor)	within or outside 1/4-mile	+	Site

**Note: Value and Effect for this variable would be developed at a later time if the City decides to use these measurements.*

Sources: Adapted from United States Green Building Council, *LEED for New Construction, Version 3*, and *LEED for Existing Buildings, Version 3*, 2009.

Google SketchUp Quick Reference Card

Copyright Google Inc. 2007

Middle Button (Wheel):
Click-Drag = Orbit
Shift-Click-Drag = Pan
Double-Click = Re-Center View
Scroll = Zoom

Left Button:
Click = Tool Operation

Right Button:
Click = Context Menu

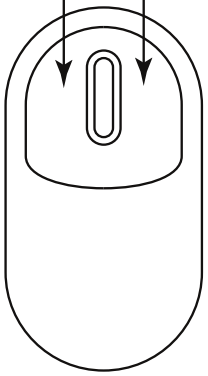

Get Current View

Toggle Terrain

Place Model

Get Models

Share Model

X-Ray

Wireframe

Hidden Line

Shaded

Shaded With Textures

Monochrome

Iso

Top

Front

Right

Back

Left

VCB = Value Control Box

Select Tool (Spacebar)
Ctrl = Add to selection set
Shift = Toggle in/out of selection set
Shift+Ctrl = Subtract from seleciton set
Ctrl+A = Select all

Eraser Tool (E)
Shift = Hide
Ctrl = Soften/Smooth
Shift+Ctrl = Unsoften/Unsmooth

Rectangle Tool (R)
VCB: Length, Width

Circle Tool (C)
Shift = Lock to current orientation
VCB: Number+s = Segments
VCB: Number = Radius

Polygon Tool
Shift = Lock to current orientation
VCB: Number+s = Segments
VCB: Number = Radius

Move Tool (M)
Shift = Lock to current axis
Arrow keys = Toggle axis lock
Ctrl = Toggle copy
Alt = Toggle auto-fold
VCB: Number = Distance

Rotate Tool (Q)
Ctrl = Toggle copy
VCB: Number = Angle
VCB: Rise:Run = Slope

Scale Tool (S)
Shift = Scale uniformly
Ctrl = Scale about center
VCB: Number = Scale factor
VCB: Number w/ units = Length

Tape Measure Tool (T)
Ctrl = Toggle create construction geom
Arrow keys = Toggle axis lock
VCB: Number = Resize model

Protractor Tool
Ctrl = Toggle create construction lines

Axes Tool

Orbit Tool (O)
Shift = Pan
Ctrl = Free

Zoom Tool (Z)
Shift = Change field of view

Zoom Extents Tool (Shift+Z)

Position Camera Tool

Look Around Tool
VCB:Number = Eye height

Paint Bucket Tool (B)
Ctrl = Adjacent fill
Shift = Replace
Shift+Ctrl = Adjacent replace
Alt = Sample material

Section Tool

Line Tool (L)
Shift = Lock to current axis
Arrow keys = Toggle axis lock
VCB: Number = Length

Arc Tool (A)
VCB: Number = Bulge
VCB: Number+s = Segments
VCB: Number+r = Radius

Freehand Tool
Shift = Draw 3D Polyline

Push/Pull Tool (P)
Ctrl = Toggle new starting face
Double-Click = Repeat
VCB: Number= Distance

Follow Me Tool
Alt = Use perimeter of surface as path

Offset Tool (F)
Double-Click: Repeat
VCB: Number = Length

Dimension Tool

Text Tool

3D Text Tool

Pan Tool (H)

Zoom Window Tool

Previous/Next

Walk Tool
Shift = Move vertically
Ctrl = Run
Alt = Walk through entities
VCB: Number = Eye height